Using System Dynamics in Modelling Mental Health Issues in the UK

Gill Smith, Professor Eric Wolstenholme, Douglas McKelvie, and David Monk

OLM Consulting, Cairns House, 10 Station Road, Teddington, Middlesex, TW11 9AA
All of the authours can be contacted on 020 8973 1179
gill.smith@olmgroup.com
eric.wolstenholme@olmgroup.com
douglas.mckelvie@olmgroup.com
david.monk@olmgroup.com

Abstract

Over the past two years OLM Consulting, initially in partnership with Cognitus, have used system dynamics modelling in a wide range of health and social care settings to shed light on a number of difficult and complex issues. A related paper presented to this conference (Using System Dynamics to Influence and Interpret Health and Social Care Policy in the UK) describes the experience of introducing System Dynamics in a public service setting.

This paper describes the work done in 2003 with two parts of the Mental Health (MH) services in London. It includes discussion of the approach to facilitating dialogue between commissioners and providers, as well as stages in the development of models and some findings from the experimental runs. The paper also discusses the potential to create a template for a "whole system" view of the wider MH arena, based on current work and consultation with experts in the MH field. Proposals to produce a template have now been accepted by a national agency (National Institute for Mental Health England, North West region).

A glossary of terms is provided at the end of the paper.

Mental Health: the Structures, Drivers and Performance Dilemmas

The Modernisation Agenda for health and social care was described in the accompanying paper. Policy directions include prevention of admission to acute care, effective joint working between health, social care and housing, effective discharge planning, better qualified staff, better standards and greater choice/reduced waiting for service users.

For MH services, key milestones have been:

- 1998 – Modernising MH Services: safe, sound and supportive (promising investment, promoting joint working, proposing MH Trusts)
- 1999 – the National Service Framework (NSF) for MH
- 1999 – the Health Act (promoting joint investment between health and social care)
- 2000 – the National Health Service (NHS) Plan (setting targets for the next 5-10 years)

Copyright OLM Consulting, 2004

- 2000 – Supporting People (SP) (promoting more flexible service arrangements for normalising people's lives in the community)
- 2001 – Building Capacity and Partnership in Care (promoting better local planning and commissioning)
- 2002 – Planning and Priorities Framework (including the provision of 1000 graduate primary care workers by 2004, to help GPs manage and treat common mental health problems)
- June 2002 – draft MH Bill (including controversial provisions for compulsory remand, committal and treatment, new powers of MH Tribunal)

The Modernisation Agenda also reinforces certain management principles:

- The importance of "whole systems" thinking (which is being promoted by the Change Agent Team (CAT) and the Modernisation Agency)
- The importance of collecting and acting on good data, shared across partners in the delivery of care (which is being promoted through Information for Health and Information for Social Care programmes)
- The need to bring these principles together in a robust Performance Management Framework, underpinned by national Performance Assessment Framework (PAF) indicators

The drive for modernisation and service improvement in Mental Health received a significant boost with the establishment of NIMHE in June 2002. The mission is described as follows:

> "We aim to improve the quality of life for people of all ages who experience mental distress. Working beyond the NHS, we help all those involved in mental health to implement positive change, providing a gateway to learning and development, offering new opportunities to share experiences and one place to find information. Through NIMHE's local development centres and national programmes of work, we will support staff to put policy into practice and to resolve local challenges in developing mental health.
>
> To achieve these aims, service users, families and communities will be at the heart of our work. We will embrace diversity, champion achievements, help to break down bureaucracy and promote flexible ways of working. NIMHE is forging new partnerships at a national and international level. We will take a lead in connecting mental health research, development, delivery, monitoring and review."

The agencies working to drive forward modernisation for Mental Health are shown in figure 1.

Copyright OLM Consulting, 2004

Figure 1: The Mental Health Programme Delivery Cycle

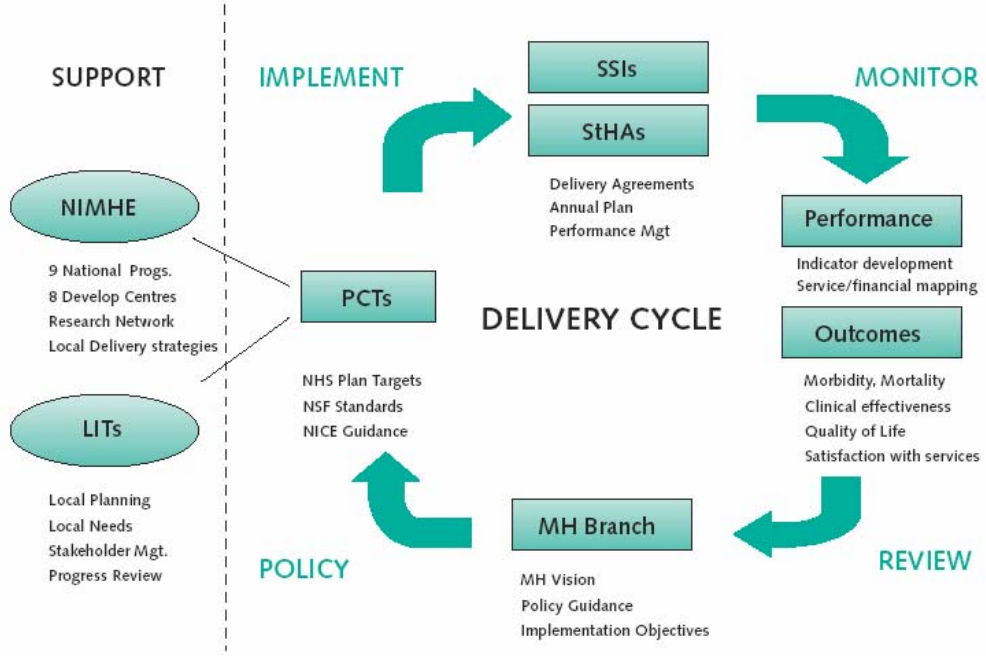

As can be seen, MH services are actively working in a number of areas, to resolve problems and promote service and practice improvements. Areas of activity include:

- Shifting the balance of services so that more patients are managed by Community Mental Health Teams (CMHT(s)) in the community and fewer become in-patients (with the attendant risk of stigmatisation and institutionalisation)
- Where admission is necessary, promoting voluntary admission (rather than sectioning under the Mental Health Act (MHA))
- Reviewing the causes of mental illness and the positive effects of measures which normalise daily lives (e.g. housing, jobs, good support networks)
- Improving information available to General Practitioners (GP(s))
- Improving primary care support for people with MH conditions

Future Directions for Mental Health Services

Considerable effort is being directed towards understanding the current situation (process mapping/measurement) and promoting good practice (innovative projects). In addition to incremental improvements, there is a desire for a more radical appraisal of options for change. For example:

- Managing demand without "labelling" – ways to prevent people coming into the clinical pathway, through providing gateways to housing/job opportunities, developing expert patients and promoting support groups
- Strengthening the primary care leadership of the service – ways to help the GP practices support people in community settings and prevent escalation of their condition

Copyright OLM Consulting, 2004

- Reducing wait-times for acceptance by a CMHT
- Preventing crisis – ways to ensure that specialist teams are available 24x7 and that the access routes (from service users, families, Accident and Emergency (A&E), police, courts etc) are effective
- Minimising use of acute beds – ways to prevent admission, expedite discharge and normalise people's lives as quickly as possible. Acute lengths of stay for MH patients are lower, for instance, in the US – is this due to different services or different attitudes?
- Challenging public perceptions about the risk which MH service users represent and the reflection of this in the way community and forensic cases are treated ("closed" institutions, compulsory detention, sentencing policy, required levels of security, restricted orders etc)
- Developing alternative services – ways to build on approaches that service users say "really work", stimulate the market, encourage pluralism
- Addressing the high proportion of prisoners suffering from MH problems

In order to develop more radical proposals, there is a pressing need to make the "whole systems" dynamic come to life. It is no longer enough to talk about partnership – there needs to be a way to help the various parties actively ***challenge assumptions and visualise possibilities***. SD is a good way to facilitate dialogue between partners and develop a shared understanding of the options for change.

The Prison Model

The first opportunity to apply SD within a MH setting arose in July 2003. The work was commissioned to test the proposals for redeveloping the Health Care Centre (HCC) in Brixton prison. There is a trend for bed reductions in MH services overall, and the study looked at whether current bed numbers (36) could safely be reduced to 30 or below.

The development of the model went through three distinct stages:

Copyright OLM Consulting, 2004

Stage 1: The PCT expressed the problem as a capacity and throughput issue and an initial model was developed to illustrate how SD might deal with such issues (figure 2).

Figure 2

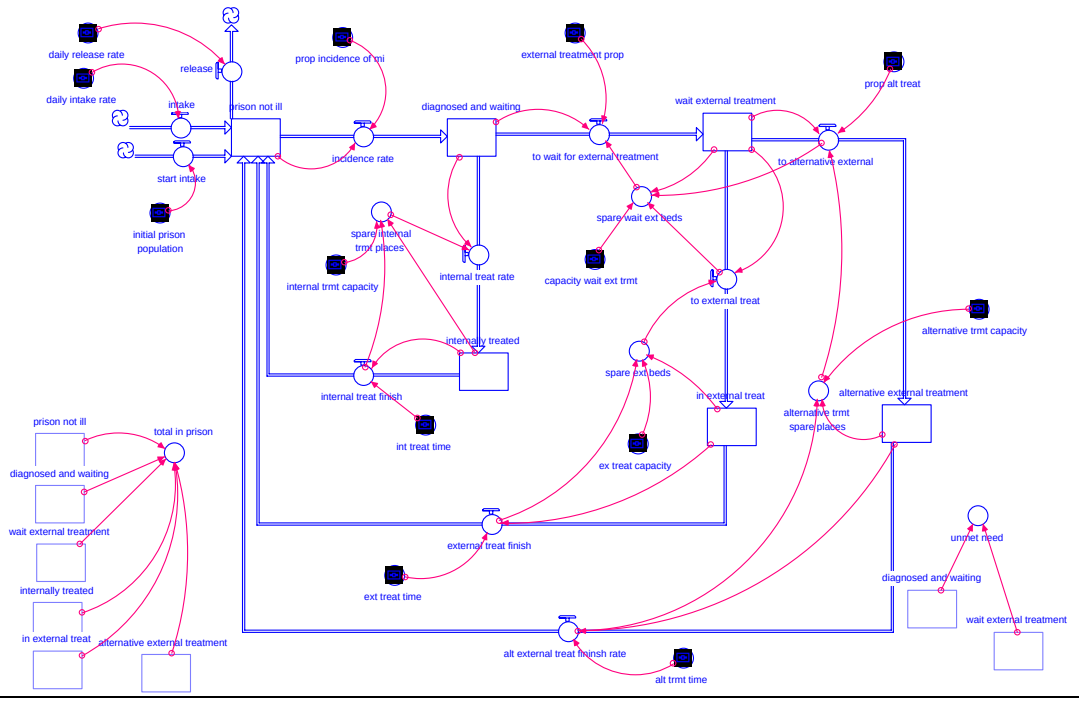

Stage 2: Following an initial meeting with an expert group (composed of prison health staff and PCT commissioning staff), the model was modified significantly to reflect a key pathway (transfer to NHS forensic bed) – figure 3. However, the part of the model which looked at different types of forensic bed (high, medium and low secure) was later deemed to be outside the scope and was removed.

Figure 3

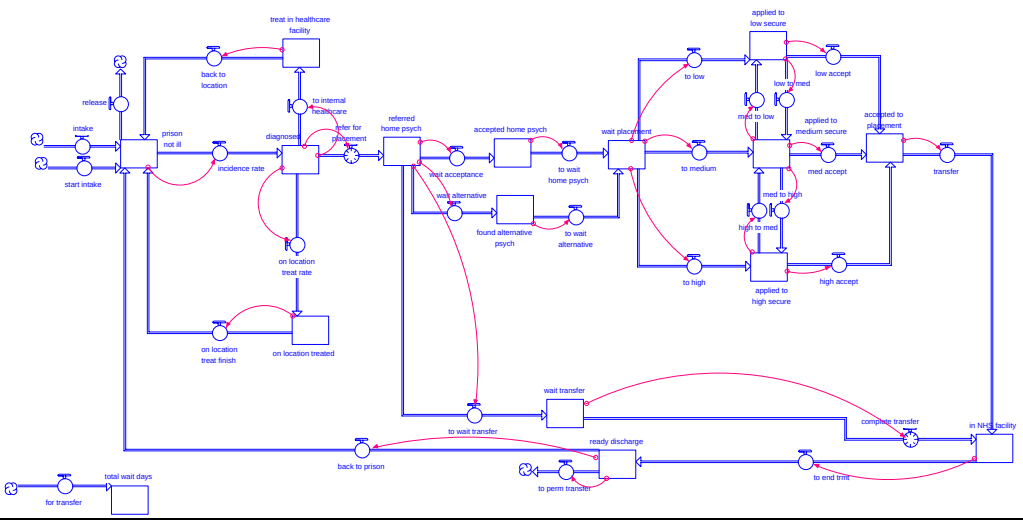

Copyright OLM Consulting, 2004

Stage 3: Following a further 2 meetings, the final version reflected the scenarios which the expert group wanted to test (figure 4 represents a simplified version). For instance, it included more detail on demand, showed a split in HCC bed usage (physical need versus MH need) and incorporated possible use of buffer beds in a private health facility.

Figure 4

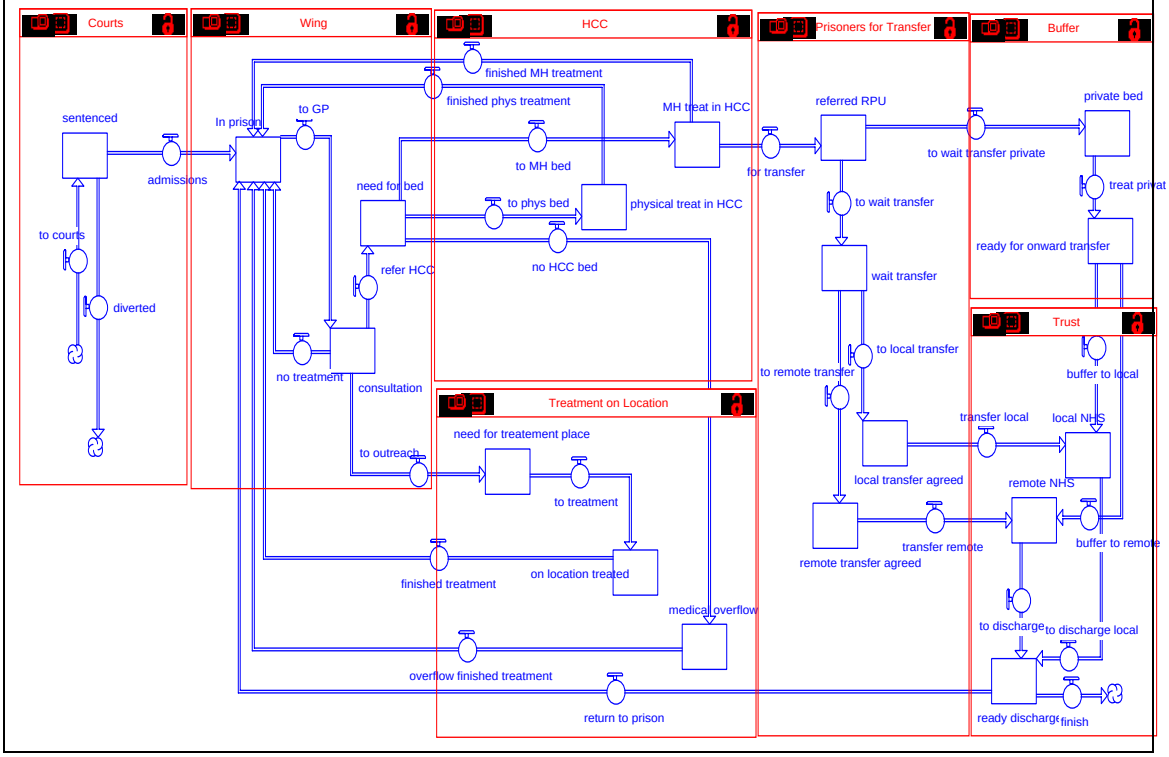

At each stage, the data required was progressively refined and time was spent in balancing flows at each iteration of the model.

Description of the Final Version of the Prison Model

The model runs for 3 years. Prisoners enter the prison from the courts (unless diverted).

They have a medical assessment on admission, and may also be seen for a medical consultation on other occasions, as required. The result may be:

- Treatment (or no action) and return to wing
- Refer for outreach
- Refer for HCC

Bed availability in HCC depends on capacity and numbers occupying beds. The model shows 2 types of patient – those with physical conditions and those with mental health conditions. Some of the latter have been designated for transfer, but are still occupying beds. If there are no spare beds (and people cannot be discharged to make space), then some referrals are refused and have to be treated on the wing as medical overflows.

Copyright OLM Consulting, 2004

Outreach patients are treated and return to the "pool" from which referrals are generated (the stock labelled "in prison"). HCC patients are similarly treated and returned to the wing. The model does not deal with readmissions, the likely effect of early discharge or the implications of medical overflows.

It does simulate the variable times to transfer, which cause a particular problem in HCC bed availability. The model provides 2 alternative scenarios: the ability to reduce the variation (e.g. through better protocols for acceptance of transfer) and the ability to use (private) buffer beds to cushion the impact of delayed transfers.

Depending on the responsible psychiatric unit (RPU), transfers can be to local or remote NHS facilities. Data for transfer times are currently shown as the same (and in fact, it has been suggested that remote transfers can be quicker than local ones, although the intuitive assumption is that local negotiation for transfers ought to be facilitated by closer working relations). Once treated, some patients will be discharged (with appropriate aftercare – not shown) and others (about 20%) will return to prison.

Scenarios Tested with the Prison Model

The model is particularly sensitive to:

- Demand
- Proportions for transfer
- Delays in transfer

Issues which affect these areas of sensitivity include:

- Sentencing policy (is prison growth likely?)
- Profile of prison population – is current prevalence of drug use (which exacerbates physical and mental illness) likely to continue? Increase?
- Other health conditions (e.g. rise in incidence of TB)
- Health policy (e.g. potential to introduce targets for end-to-end transfer times, instead of current tracking of time AFTER patient is accepted)
- Treatment methods (e.g. more treatment available without transfer, more detox facilities)
- Care models (e.g. more treatment in "normal" surroundings rather than beds)
- Contract policy (e.g. who pays for delays in transfers, possible use of buffer beds)

The most striking problem was the highly variable transfer time (said to be anything from 5 – 500 days). The model was constructed with a random generator for "transfer days" (average 166d). A switch was provided to show the impact of stabilising (and reducing) transfer time (new average 43d) – see figure 5, 6.

Copyright OLM Consulting, 2004

Figure 5: Variable transfer time

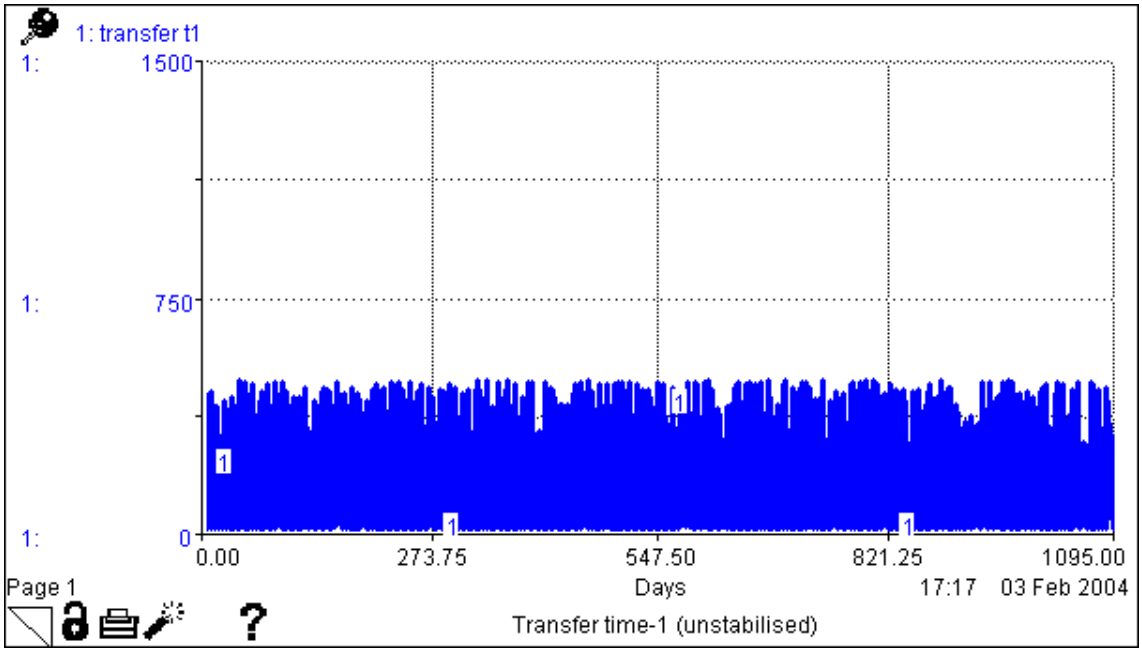

Figure 6: Impact of transfer time on bed usage in HCC

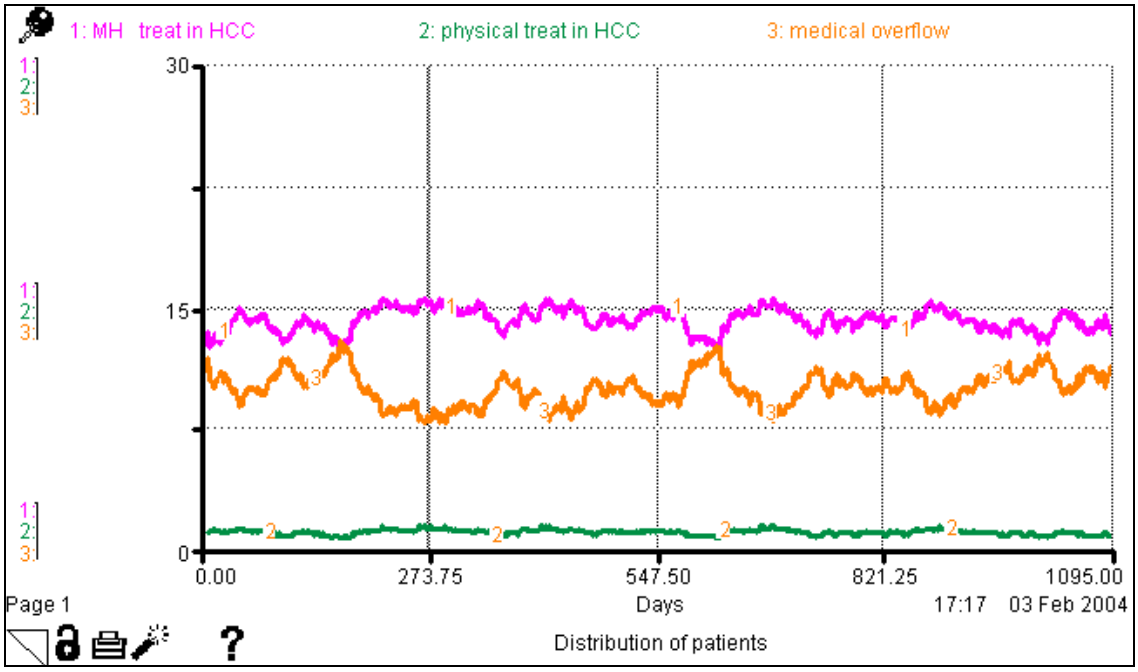

Line 1 shows patients in the HCC for mental health treatment. Line 2 shows patients in the HCC for physical problems. Line 3 shows patients referred to the HCC for whom there were no beds (these had to be treated on location)

Note that because of delayed MH transfers blocking beds, very few physical cases are treated (most become medical overflows). The reason for the variable transfer times is shown in insert 1: there is a protocol governing transfer time ***from when a patient is accepted***, but there is no check on how long it takes to agree the transfer. This provides a way for RPUs to delay transfers without incurring penalty (an example of "game playing" with performance targets).

Copyright OLM Consulting, 2004

INSERT 1

Prisoners Waiting More Than 3 Months For Transfer To Mental Health Units Following Acceptance By The NHS

PROCEDURES FOR ACTION BY REGIONAL FORENSIC COMMISSIONERS AND REGIONAL CASE MANAGERS

Measuring the waiting time

The start date for waiting time for transfer is the date when the clinician assessing the prisoner has agreed to accept the prisoner for treatment in an NHS mental health inpatient facility.

Actions for Regional Forensic Commissioners and Regional Case Managers

Once notified of a case by the prison, you should review the details and identify areas for action. The clinician(s) providing the initial assessment should be involved, and if necessary a case review held.

It is expected that you will take all necessary steps to effect transfer as quickly as possible. This includes:

- Liaising with other Regional colleagues if the prisoner is from another area
- Referral to services other than forensic services if necessary
- Making full use of all locally available forensic resources

You should provide a report to the prison on progress within 2 weeks.

6 scenarios were tested:

- "Stabilising" transfer times (less variability and lower average value)
- Trends in MH demand
    - Reduction of 10% (e.g. through diversion/rehab policies for prisoners with MH issues)
    - Increase of 10% (e.g. through increased severity of drug problems)
- Facilitating transfer by use of 5 buffer beds (with incentive to move on within 30d)
- Change in model of care resulting in 10% HCC referrals moved to treatment on location
- Bed numbers varied round current 36 beds (30 beds, 42 beds)
- Combination strategy (stabilised transfer times, buffer beds, 10% HCC moved to treatment on location)

Results show that:

- Both stabilising transfer times and using 5 buffer beds reduces length of stay (LOS) in HCC and therefore improves bed usage and reduces medical overflows.

Copyright OLM Consulting, 2004

The most effective (on current data) is the stabilisation (and reduction) in transfer time

- Reducing demand on HCC by 10% or shifting 10% to treatment on location have similar effects on bed usage and overflows (though the latter is less effective). However, shifting 10% demand to treatment on location results in an increase of 17% in patients on location (which would have resource implications for outreach). Neither option is as effective as using buffers or stabilising transfer rates.
- Increasing beds to 42 is nearly as effective as reducing demand by 10%

Figures 7 and 8 show the effect of reducing transfer time (compare with figures 5 and 6). Note the much lower levels of medical overflows in figure 8.

Figure 7: Reduced transfer times

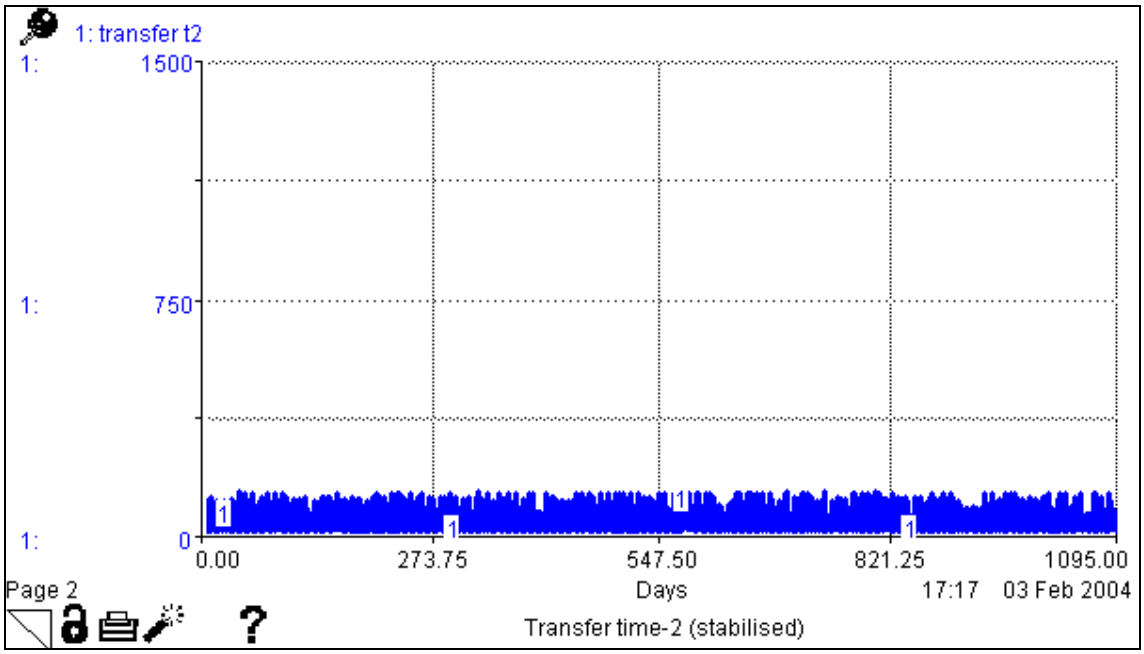

Copyright OLM Consulting, 2004

Figure 8: Bed usage under reduced transfer times

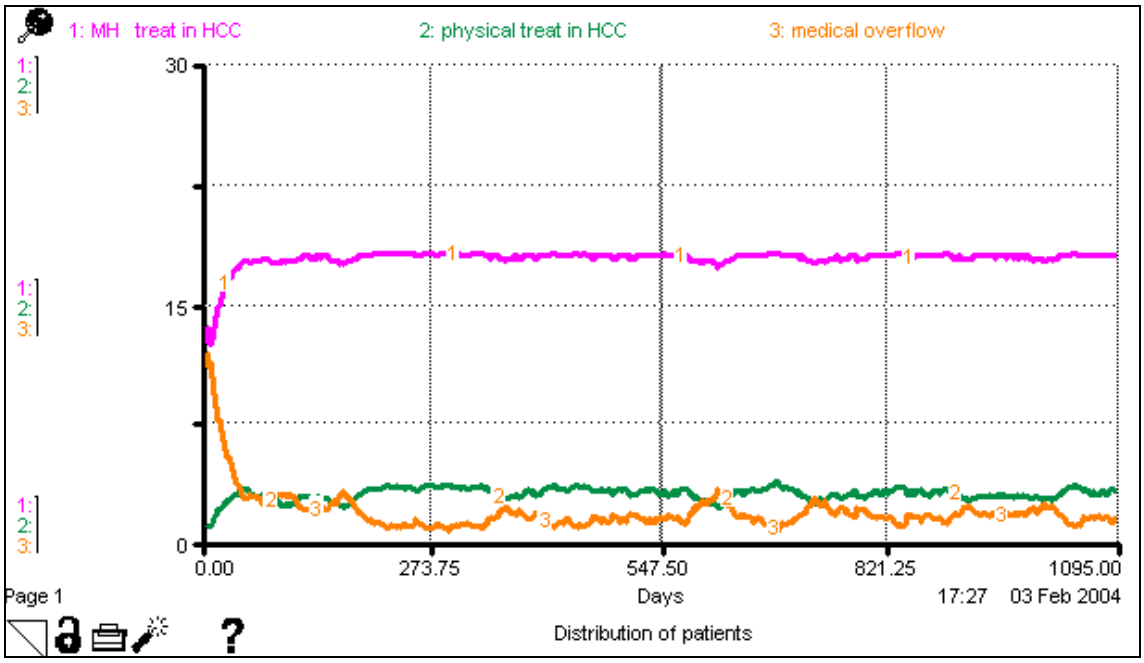

Line 1 shows patients in the HCC for mental health treatment. Line 2 shows patients in the HCC for physical problems. Line 3 shows patients referred to the HCC for whom there were no beds (these had to be treated on location)

The only test solution which removed the incidence of medical overflows altogether was the combination of stabilised transfer rates, buffer beds and a 10% shift to treatment on location.

Learning from the Prison Project

The most noticeable effect was the role of SD in facilitating productive problem-solving across agency boundaries. Initially, there was considerable unease between the PCT commissioners (who were anxious to reduce prison beds) and the prison health staff (who felt that the PCT did not understand "their world" and would exacerbate clinical risk by "tinkering with beds"). By the end of the first meeting, there was a noticeable lessening of this tension, with participants debating the model rather than addressing objections at each other. By the end of the second meeting, there was a tentative proposition that the model demonstrated the risks of reducing beds ***under the current model of working***, but that bed reductions could be possible under modernised models of working. At this point, participants were asked to consider various options:

- The possibility of analysing subsets of patients (notably self-harmers) and considering alternative treatments (without use of beds)
- The possibility of other changes in demand, patient profile or treatment which could lead to different requirements in future

However, by the time of the third meeting, the willingness of prison health staff to consider radical options had waned (particularly in the face of the extra work which would be required to find data on subsets of patients). The PCT commissioners, however, remain interested in pursuing this level of analysis, possibly at a later date.

Copyright OLM Consulting, 2004

Conclusions from work with the Prison Model

HCC can manage with 36 beds but there are risks (medical overflow), partly caused by the highly variable transfer time (which leads to fluctuating bed usage). Addressing this variability could have a significant benefit.

If beds are reduced, the risks increase ***unless*** there are changes in practice which reduce pressure for beds ***and*** unless transfer times become more stable

Practice changes (more treatment on location) would have their own costs and risks.

On current data, it appears risky to reduce the number of beds in the proposed HCC development. However, there are indications that, if more radical options are considered, it might be possible to configure the new HCC development in alternative ways.

Without further data on demand trends, specific patient-type flows and alternative treatments, the best course appears to be to plan for a flexible configuration of the new HCC facility.

The Forensic Model

The second opportunity to apply SD within a MH setting arose soon after, in late July 2003. The work was commissioned to provide a "whole systems" view of the SEL Forensic Strategy, which proposed an increase of 129 beds. There is a trend for bed reductions in MH services overall, and the study looked at whether this number of beds was appropriate.

The proposed increase represented 36.8% more beds (rising from 334 in-house provision to 463). It was slightly less than the then total of 154 out-of-area transfers (OAT(s)) (though this figure was on a reducing trend, due to improved bed management).

A key point was that the decision to add 129 beds was based on an analysis of census data and expected trends. However, the utilisation of OATS had arisen due to complex interactions of supply and demand and it was important to understand what factors were operating and might come into play in the future. The PCT wished to look at the dynamic interactions between demand, capacity, designated security levels, length of stay and other aspects which affect decisions on bed numbers and utilisation.

The purpose of the study was therefore to understand the derivation of needs for beds and to use this understanding to explore the forensic strategy, as well as potential scenarios for the future. The measures adopted to evaluate options were:

- Result on total OATs
- Point at which current strategy would "run out", necessitating further intervention

The development of the model went through two stages.

Stage 1

An initial model was presented at the first meeting of the expert group (composed of the SEL Forensic lead manager, Trust managers from Oxleas and SLaM and some data analysis staff). The ***structure*** of the model was largely accepted. However, considerable discussion centred on the ***data*** to be applied in the simulation. It had taken considerable

Copyright OLM Consulting, 2004

effort for the parties to agree the data that had been incorporated in the Forensic Strategy document. The further probing required to populate a SD model exposed uncertainties about the original data, as well as an inability to provide additional data relating to ***flows*** (proportions flowing down particular pathways, composition of the flows by patient type, length of stay). This caused a certain anxiety for the Trusts, who were responsible for reporting their activity to the Commissioning Body. The model was used with two versions of data – one for Oxleas and one for SLaM.

Stage 2

A second meeting was held to view initial results with the data. In order to replicate bed usage, some adjustments to the given data had to be made. Despite strenuous efforts, the model data was never fully reconciled with reported bed usage, but all parties agreed that the resultant models were robust enough to test scenarios which reflected the issues in planning bed numbers and usage. A third meeting was held with just the SEL Forensic lead manager, to refine scenarios and results.

Description of the Final Version of the Forensic Model

Figure 9 shows a simplified version of the model.

Figure 9: SEL Forensic Model

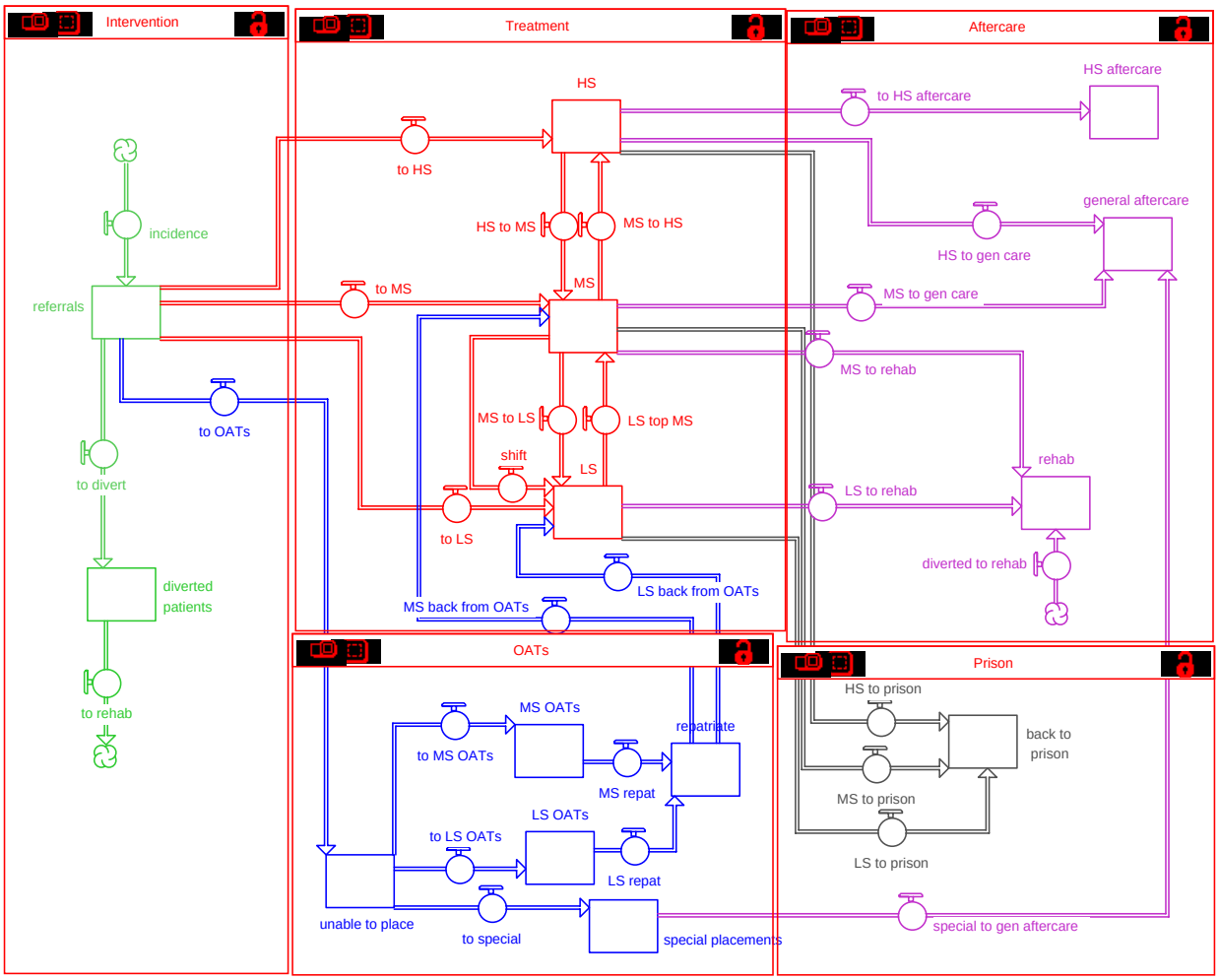

Copyright OLM Consulting, 2004

Both models (Oxleas and SLaM) follow the same format. They run on a daily basis for 10 years, taking an incidence of referrals which may be modified for population growth and/or prison growth. The flows are broken down into 5 patient types (black patients, patients on restricted orders, special needs, prison transfers, others), using arrays.

At the assessment stage, patients may be diverted. The remainder are designated for high, medium or low security placement, or for special placements (these are used for people with special needs eg elderly, head injuries). If capacity exists in-house, they are admitted, but the "overflow" is sent to OATs. Any spare capacity which becomes available in-house is used for new patients or for transferring patients back from OATs (known as repatriation). There is also a "trickle effect" between in-house beds, mainly in the direction of moving HS patients to MS beds (but movements also occur from medium to high or low security, and from low to medium security).

Following treatment (based on a length of stay for each bed-type), patients are discharged to rehab/step down or general care. Some prison transfers may be returned to prison.

Scenarios Tested with the Forensic Model

The commissioning goals are:

- Reducing security levels
- Repatriation
- Self sufficiency (managing cases within locality)

Key issues are:

- Referral patterns (there is a tendency for high demand on forensic facilities in south east London, although SLaM reports that referrals from adult general services have fallen, following multidisciplinary meetings with acute services to discuss possible patient pathways)
- Patients "stuck" in OATs (both Trusts report significant reductions by using OATs teams to ensure patients get reviewed and moved on appropriately)
- Prevalence of drug-users (increases length of stay)
- "Higher end" patients now treated in NHS (people who would have been in special hospitals in previous times)
- Size of wards – difficult to manage "older-style" provision of high-bedded units
- Home Office policy: prison intake is expected to go in MS, and Home Office decisions can delay moving on for restricted patients and drug-users
- Ability to "move on" – public opinion can deter early release if there are high-profile failures and early release puts pressure on accommodation and services for after-care (there is a lack of hostels and LA accommodation)
- Patients' ability to cope with discharge (some are reluctant to go or have relapses in the community)

The scenarios included:

Copyright OLM Consulting, 2004

- Increased demand:
    - Population growth
    - Growth in prison population (with pressure for forensic beds due to continuing high levels of drug abuse)
- Increased supply:
    - Additional beds
    - Reduced length of stay (equivalent to additional capacity)
    - Shift from MS to LS categories (resulting in improved bed usage, since length of stay in LS is lower)
- Reduced demand
    - Diversion before admission to forensic beds (e.g. to intensive rehab facilities)

General findings were as follows (illustrated with Oxleas). If 45 extra beds were made available at day 100 (as planned) and nothing else changed, the pressure on OATs disappeared. However, if the population increased by 10% per year, then the new beds would be insufficient within 5 years (figure 10).

Figure 10: bed usage (measured by number overspilling into OATs) under conditions of no change, extra beds and increased demand

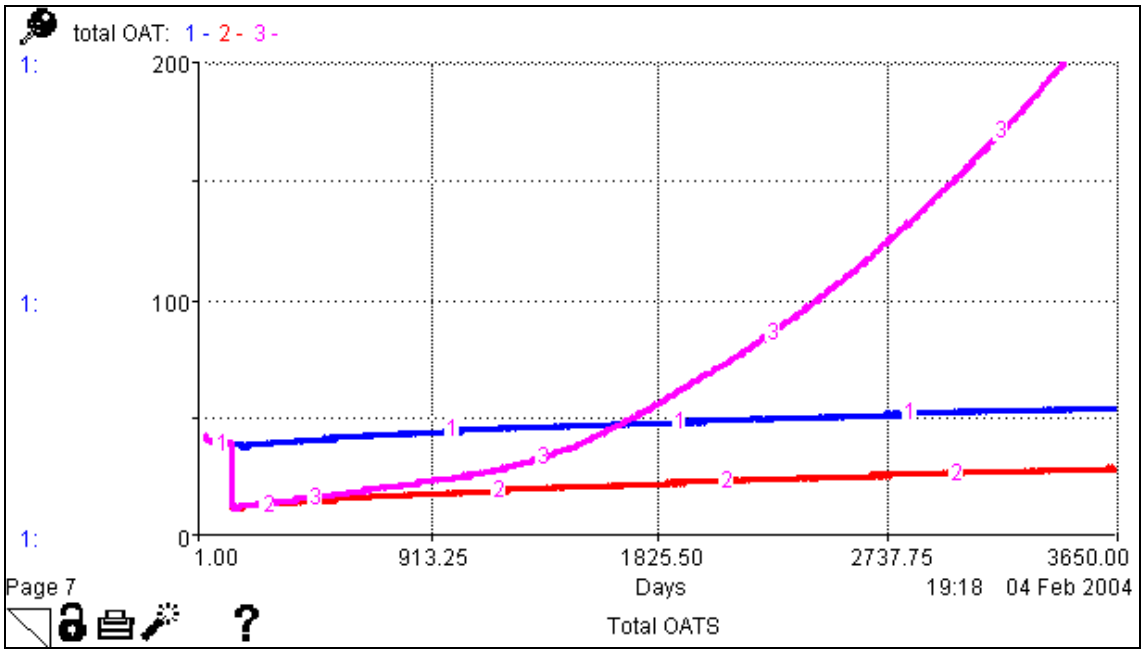

Line 1 is extrapolating the current situation, line 2 is with current demand and an extra 45 beds on day 100, line 3 is with same 45 beds but 10% population increase p.a.

Copyright OLM Consulting, 2004

However, if a combination of measures was used, then the results could be better. Figure 11 shows the effect of providing only 25 new beds at day 100, but also:

- Diverting 10% admissions to some sort of intensive rehab facility
- Shifting 10% of placements in MS to LS
- Reducing length of stay in MS/LS by 50%

Fig 11: OATS improves (line 4 compared to line 3) when practice changes are made as well as providing extra beds, in a situation of increasing population

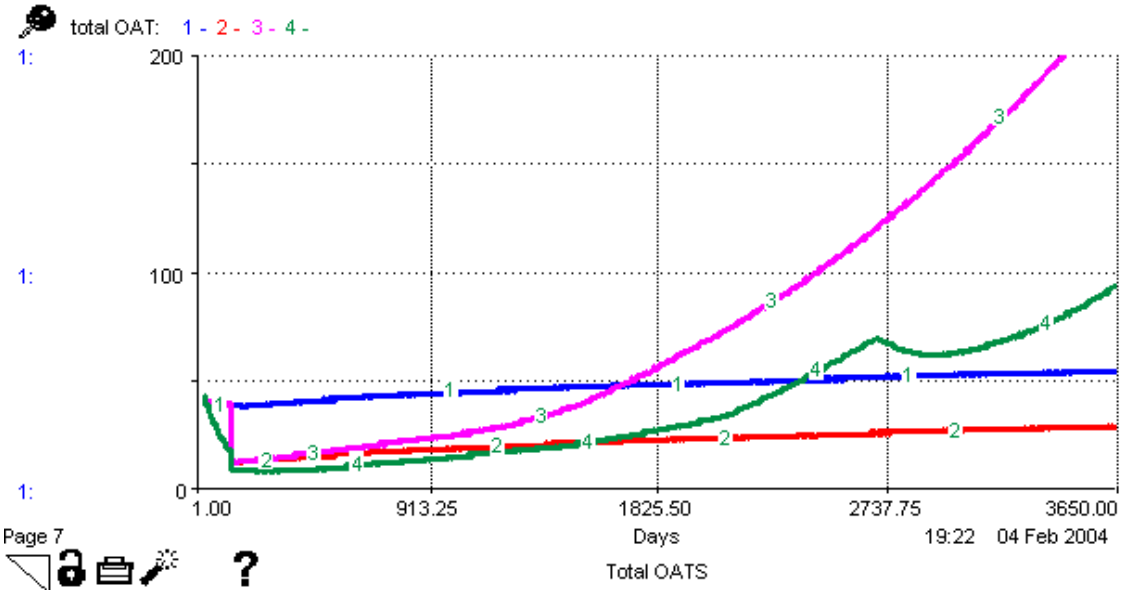

Line 1 is extrapolating the current situation, line 2 is with current demand and an extra 45 beds on day 100, line 3 is with same 45 beds but 10% population increase p.a.

Line 4 is with 25 beds at day 100, plus immediate 10% diversion, 10% shift MS to LS and 50% decreased length of stay in MS and LS.

The proxy measure used to demonstrate a "good result" in these experiments was number of patients treated in the Trust versus OATs.

Learning from the Forensic Project

The most obvious learning point of this project was the difficulty in obtaining flow data from a conventional "bed usage" reporting system in the NHS. The type of data collected tends to be snapshots, with little detail by subsets of patients and virtually no "longitudinal analysis" to provide length of stay data.

Like the prison project, this experience illustrated how facilitating discussion around a model can help managers from different settings (and with different organisational priorities) consider wider issues and more radical options. For forensic patients, lengths of stay can be very long (e.g. hostel 375d, LS 310d, MS 550d, HS 2500d). In the USA, practice is different and patients spend less time in "beds". By the end of the project, some participants were contemplating scenarios with drastically reduced lengths of stay and a shift of resources (from beds to investment in community support).

Copyright OLM Consulting, 2004

Conclusions from work on the Forensic Project

The proposed bed increases would not sustain SEL's forensic needs if circumstances changed, for instance through a 10% population increase. More sustainable solutions would involve intervening in the ***process***.

The following were demonstrated:

- 10% diversion before admission. This was beneficial as it avoided the "institutionalisation" of patients (and the resultant long lengths of stay) but it would have its own costs. In the model, diverted patients are shown as receiving intensive support for 90d and then transferring to rehabilitation aftercare services
- 10% shift of security levels (from MS to LS). This was beneficial as it reduced lengths of stay. The model shows no additional "cost" of doing this, other than an increased flow of LS patients to aftercare (predominantly rehabilitation services)
- 50% reduction in length of stay for MS and LS patients. Again, the model showed no additional "cost" of doing this, though it would require additional aftercare support

Since intervening in the process involves attention to admission, treatment ***and aftercare***, this approach would require the cooperation of other agencies. For instance, referrers would be encouraged to think of shorter periods of treatment at lower security levels, and providers would be encouraged to offer a mix of diversion and aftercare which supported lower lengths of stay. The strategies described here cannot be implemented without resources for aftercare.

The implication is that it may be useful to reconsider the proposed number of forensic beds and invest some funds in diversion and aftercare, in partnership with the local authority and other providers.

Scope for Using SD in Mental Health

From the results of the two short projects described above, OLM Consulting looked at the possibility of deriving a model of the whole MH system. It appears that this has not been done before, and sessions with various MH professionals (from national bodies and operational management) have shown that people have some difficulty in articulating the way that their own area of interest fits a bigger picture. It may be that MH is a newer discipline than other areas of the NHS, or that recent changes introduced by the NHS Plan and MH NSF have yet to bed down.

The need for an integrated view of the MH system is widely acknowledged. Insert 2 describes some of the worrying statistics on prevalence of MH issues within the prison service.

Copyright OLM Consulting, 2004

Insert 2: statistics of MH issues within prison

- From a prison population of approximately 65,000 in England and Wales, an estimated 66% of the remand population are thought to have some form of mental health problem compared with 39% of the sentenced population.
- Another study of the male remand population of England and Wales found that:
    - 63% had some form of "psychiatric disorder".
    - 38% had symptoms of substance misuse
    - 26% had some form of "neurotic illness".
    - 11% had a personality disorder.
- The risk of suicide is also a major concern within the prison setting:
    - A prisoner is up to 7 times more likely to kill himself
    - 27% of male remand prisoners had attempted suicide at some point in their life
- More than half of male prisoners (58% of male remand and 63% of male sentenced) had misused alcohol to a significant extent, compared with 36% of female remand prisoners and 39% of female sentenced prisoners.

Equally worrying are the statistics of people *outside* prison with MH issues (see insert 3) and particularly the numbers detained under the MHA (see insert 4).

Copyright OLM Consulting, 2004

Insert 3: Social and Economic Circumstances of Adults with Mental Disorders, September 2002

- 33% of people who responded to the survey (whether or not they had a mental disorder) were unemployed or economically inactive whereas amongst those with psychosis, the rate was more than doubled (72%)
- those with a mental disorder were far more likely than those with no disorder to be living in rented accommodation (38% compared with 24%). Among those with a psychotic disorder, about half were living in accommodation rented from a Housing Association or Local Authority
- compared with all other groups, those with a psychotic disorder were more likely to have left school before reaching 16 years old and with no qualifications. The alcohol and drug dependent groups included the highest proportion of students, that is those who had not finished their full-time education
- 37% of those with a mental health disorder had difficulty with at least one activity of daily living (from a range of examples including personal care, preparing meals, dealing with paperwork or managing money) compared with 16% of people without a mental disorder
- just over a quarter of people with a mental disorder had borrowed money in the past 12 months, rising to 50% for those who were drug-dependent, compared with 10% for people with no disorder
- 3 life events were twice as likely to have been experienced by those with a mental health disorder compared with those with no mental disorder: separation or divorce (44% compared with 23%); serious illness, injury or assault (40% compared with 22%); and having a serious problem with a close friend or relative (27% compared with 13%)
- 12% of people with neurosis and 12% of those with alcohol dependence said they had run away from home, rising to 24% among those with drug dependence and 34% among those with psychosis. Only 3% of people with no disorder said they had run away from home
- 12 and 6% of people who were drug and alcohol dependent respectively had been expelled from school, compared with 1% of people with no disorder

Insert 4: All formal admissions to NHS facilities (including high security psychiatric hospitals) and private mental nursing homes registered to detail patients under the Mental Health Act 1983 and other legislation, by legal status.

Legal status	**1996-7**	**1997-8**	**1998-9**	**1999-2000**	**2000-1**	**2001-2**	**% increase**
All (excluding place of safety detentions)	23,725	25,415	26,909	26,700	26,632	26,256	10.6%
Part 11	21,818	23,525	25,025	25,040	25,098	24,700	13.2%
Section 2	11,406	12,614	13,654	13,485	13,643	13,582	19.1%
Section 3	8,891	9,311	9,652	9,699	9,660	9,070	2 %
Section 4	1,521	1,600	1,719	1,856	1,795	2,048	34.6%

Copyright OLM Consulting, 2004

Modelling the whole of MH

Because of the difficulty in visualising the total system, simpler representations were important in engaging people with the modelling process. Figure 12 represents the current "best guess" at the component parts.

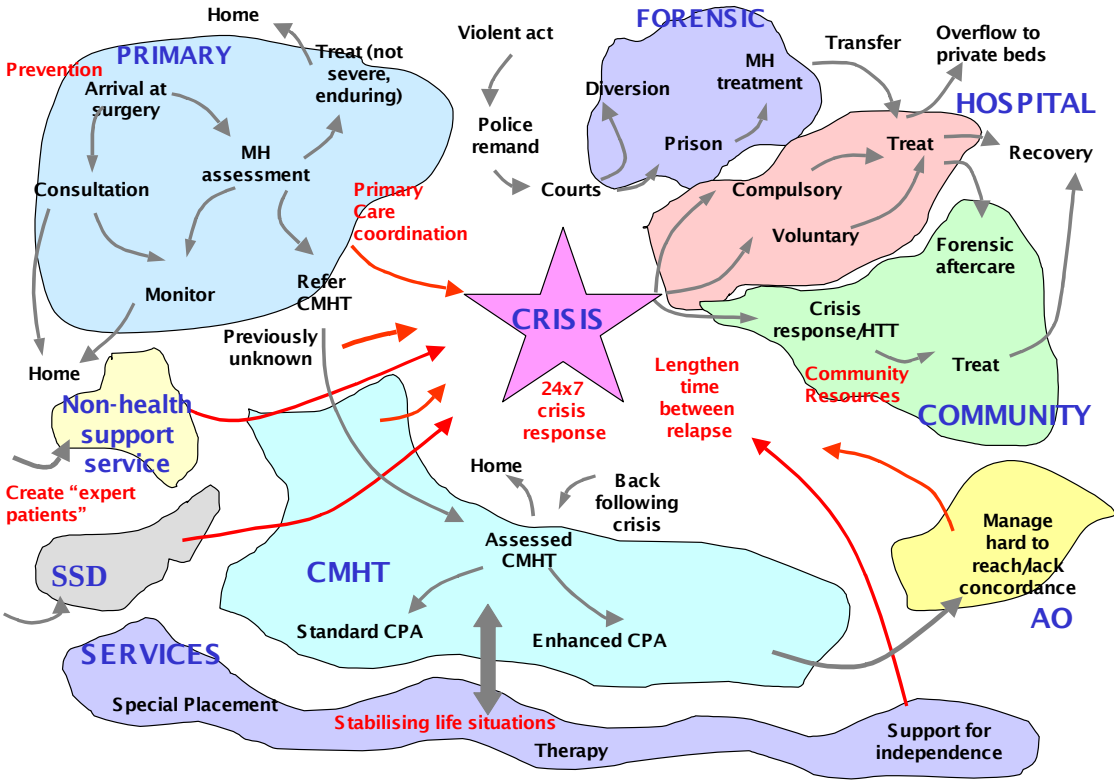

Fig 12: Mental Health Map– Intervention Points?

Copyright OLM Consulting, 2004

Figure 13 represents the developing model of the whole MH system.

Figure 13: MH model

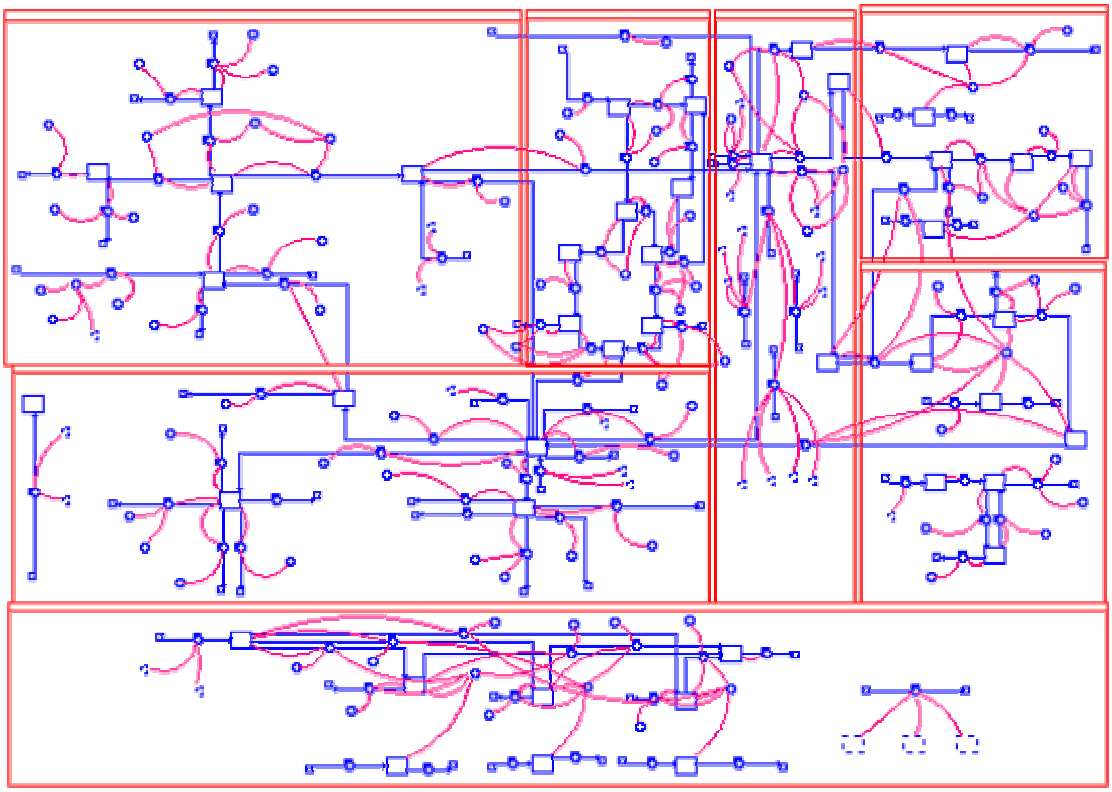

The model shows the following flows:

- People go to see their GP, who will continue to see some on a consultation basis, but will refer others to the CMHT
- Some people will not go to the GP, but may attend voluntary sector clubs or be supported by social services
- Patients referred to the CMHT will be managed under 2 levels of the Care Program Approach
    - Standard (perhaps 30%)
    - Enhanced (perhaps 70%)
- Cases under CMHT can be referred for services:
    - Use of Assertive Outreach
    - Other services:
        - Special placements (institutional care, 24 hour hostels etc)
        - Therapy (psychology, psychiatry, drug treatment etc)
        - Support for independence (housing, help with jobs, general support etc)

Copyright OLM Consulting, 2004

- There is a chance of recovery from all these pathways, but also a significant possibility of crisis (more so during critical periods such as waiting for acceptance to CMHT or waiting for service)
- The response to crisis is shown as:
    - Compulsory admission to hospital
    - Voluntary admission to hospital
    - Community option (under crisis resolution/home treatment teams)
- People may also enter the MH system via the police and courts and will be more likely to be detained compulsorily
- Following discharge from any of the crisis response routes, patients return to the CMHT (hospital discharges are shown as CMHT referrals, whilst discharge from CR/HTT goes straight to allocation in the CMHT)

The issues we would like to explore with this model include:

- Variable configurations – which ones work?
- Variable types/volumes of service – which ones work?
- Variable workforce configurations – which ones work?
- Huge variation in how CPA levels are applied – what impact does this have?
- How good are joint working (e.g. single assessment) and joint commissioning?
- Shift in services should be to community (away from acute): what effect would this have? What is needed to make it happen?
    - Currently 35% NHS costs are in secondary/tertiary MH services; 10% A&E activity is MH-related
    - 30% of primary care work involves MH….but are GP and community health services adequately coordinated?
- Is the balance right between "treatment" and "support for normalising lives"? Is the medical model too dominant?

We would like to run experiments to understand:

- Admission rates (e.g. where AO involved/not involved)
- Time between crises (preventive effect of various services, visit rates)
- Concordance – effect on rehab/improvement in condition
- Suicide – preventive effect of services
- Delays in system – where do they occur and what effect do they have

It is likely that some of these aspirations will be met in planned work with NIMH(E), scheduled for early 2004.

Copyright OLM Consulting, 2004

Conclusions and predictions for the future

This paper has described two pieces of work in the MH arena – one in a prison and one in forensic services. Together, these represent a part of the compulsory detention segment of the total MH system. However, there are other parts of the system (primary care, community treatment, voluntary admissions, MHA admissions) which need to be included in any whole systems view of MH.

Interest to date has centred on simple questions relating to capacity, and yet even these have resulted in questioning assumptions relating to demand and practice. The trigger for these pieces of work was a need to provide a more quantified analysis to underpin business plans, but results were seen to be of interest in strategy, service development and operational management. Some of the questions which were raised and not answered (particularly in relation to forensic strategy) are currently being pursued through joint proposals with a Public Health Consultant, who is keen to look at the effect of environmental factors on the prevalence of MH issues.

The proposed work with NIMH(E) has the potential to tap into a much wider view of the MH system. The objectives are:

- To assist the development of national service guidelines for best practice in MH management
- To explore the impact of more radical options (for instance, shifts in the balance of services suggested by service user forums)
- To improve commissioning, resource usage, capacity management, investment and alternative ways of working between agencies at a local level.
- To provide a new focus for operational managers and clinicians in deciding where to target their improvement initiatives for best effect

We expect that the eventual MH whole systems model will be even more complex than models developed for tracking patient pathways in relation to delayed discharge (see other paper presented by OLM Consulting to this conference). We note that it seems that the MH model will be less linear and more convoluted, since MH patients generally have repeat episodes of care. We expect a similar experience in working with localities, where the main model can be offered as a template but local partnerships will modify it, as they "do things differently" in certain areas (e.g. in deployment of particular services).

Mental health has a significant challenge in redressing the public image of patients as "mad and bad" and promoting informed public discussion about depression, cognitive disorders, psychosis, schizophrenia and the like as treatable conditions requiring, above all, support for living a normal life in the community. We look forward to an interesting learning experience and trust that it will assist MH services in addressing the challenges they face.

Copyright OLM Consulting, 2004

References

Hertzman, M. and G. Levin (1974). "Empirical confirmation of a simulation model of mental hospitalisation." International Journal of Social Psychiatry 20(3-4): 218-244.

Hertzman, M. and G. Levin (1974). "The uses of a macro-systems modelling approach to mental hospitalisation." International Journal of Social Psychiatry 20(3-4): 225-230.

Huz, S., D. F. Andersen, et al. (1997). "A Framework for Evaluating Systems Thinking Interventions: An Experimental Approach to Mental Health System Change." System Dynamics Review 13(2): 149-169.

Johnstone, P. and G. Zolese, (1999). Systematic review of the effectiveness of planned short hospital stays for mental health care BMJ 318:1387-1390 (22 May)

Nurse, J., Woodcock P. and Ormsby J (2003). “Influence of environmental factors on mental health within prisons: focus group study”. BMJ 327:480

White, K., Roy D. and Hamilton I (1997). “ABC of mental health: Community mental health services”. BMJ ;314:1817-20 (21 June)

Marshall M. (1996) “Case management: a dubious practice”. BMJ 312:523-4.

Hamilton I. and Roy DH (1995). “The care programme approach at work in mental health care”. Nurs Times 91(51):35-7

Atakan Z, and Davies T. (1997). “ABC of mental health: Mental health emergencies”. BMJ 314:1740 (14 June)

Atakan Z. (1995). “Violence on psychiatric in-patient units: what can be done” Psychiatr Bull 19:593-6.

Craig, T.K.J and Boardman A.P. (1997). “ABC of mental health: Common mental health problems in primary care”. BMJ 314:1609 (31 May)

Bond G. R., McGrew J. H. and Fekete D. M. (1995) “Assertive outreach for frequent users of psychiatric hospitals: a meta-analysis”. J Ment Health Admin 22:4-16.

Copyright OLM Consulting, 2004

Glossary of Terms

Accident and Emergency – A&E

Assertive Outreach - AO

Community Mental Health Team – CMHT

Crisis Resolution/Home Treatment Teams – CR/HTT teams

Department of Health - DH

Health Care Centre - HCC

High secure (forensic beds) - HS

Information Technology – IT

Local authority - LA

Low secure (forensic beds) - LS

Medium secure (forensic beds) - MS

Mental health – MH

Mental Health Act - MHA

National Health Service of the UK – NHS

National Institute of Mental Health (England) - NIMH(E)

National Service Framework - NSF

Out of area transfers – OATS

Oxleas Mental Health Trust - Oxleas

Primary Care Trust – PCT

RPU – responsible psychiatric unit

South London and Maudsley Mental Health Trust - SLaM

South East London - SEL

Social Services Department - SSD

Strategic Health Authority – SHA

System Dynamics – SD

For the benefit of non-UK readers, unless otherwise indicated the word "national" means "England-wide". The word "government" refers to the UK-government, which controls health policy for England only. A variety of devolved arrangements apply in Northern Ireland, Scotland and Wales.

Copyright OLM Consulting, 2004

Back to the Top